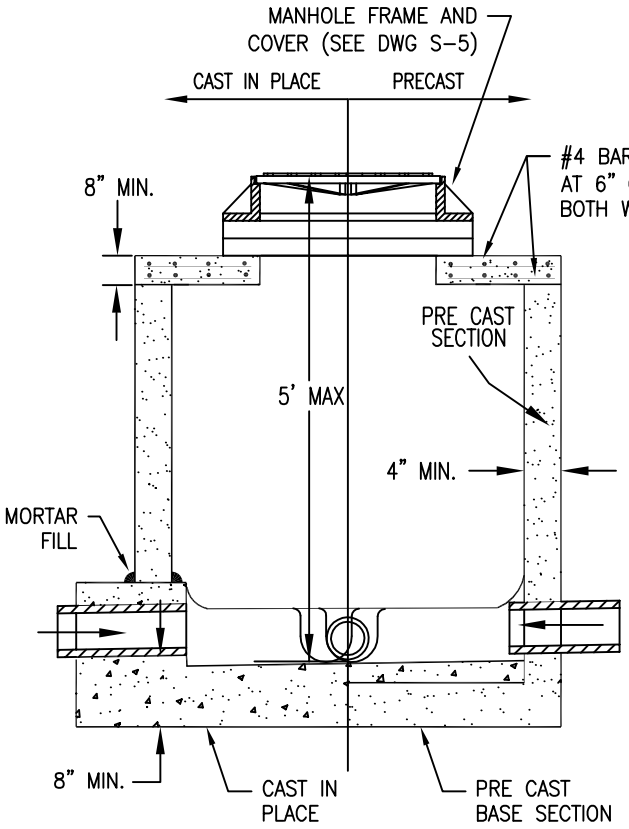

SECTION A-A

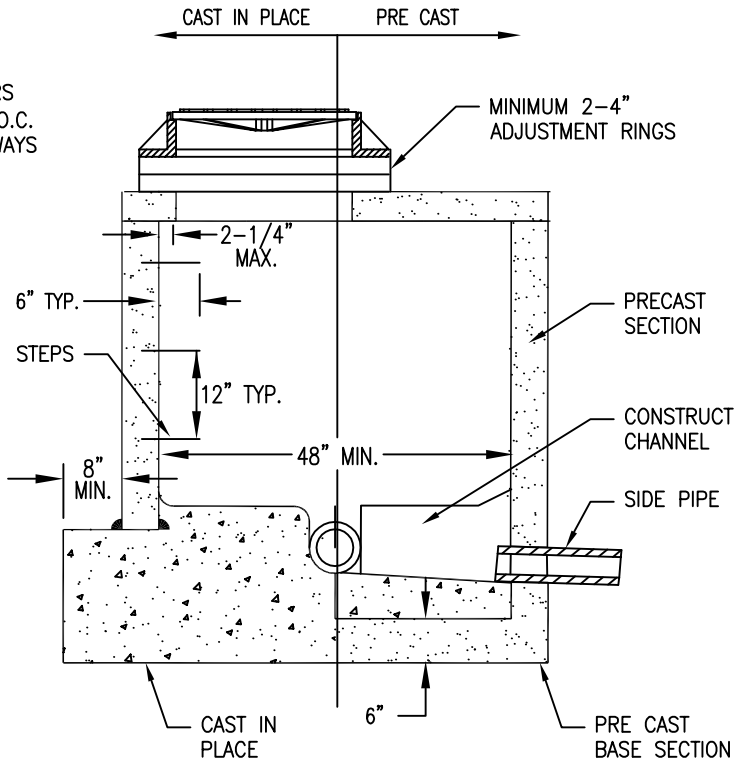

SECTION B-B

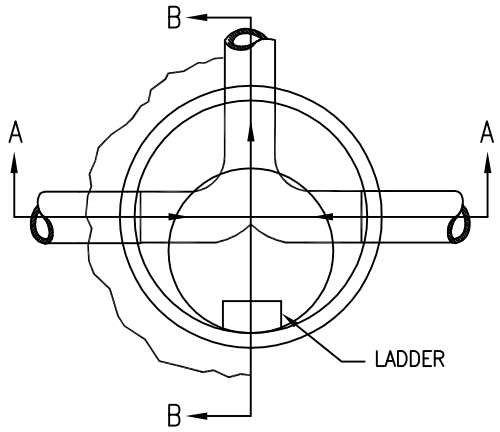

NOTES:

1. ONLY USED WITH SPECIAL WRITTEN APPROVAL FROM THE DISTRICT.
2. PRE CAST MANHOLE SECTION AND FLAT SLAB COVER SHALL CONFORM TO WSDOT STD DWG B-23C.
3. ALL MANHOLE JOINTS SHALL BE GROUTED WITH NON-SHRINK GROUT TO INSURE A WATER TIGHT SEAL AND THE INTERIOR SHALL BE TRAWLED TO A BROOM FINISH.
4. ALL CHANNELIZATION OF MANHOLE BASES SHALL BE COVERED BY A RIGID MATERIAL DURING CONSTRUCTION OF ROAD SURFACES TO PREVENT FOREIGN MATERIALS FROM ENTERING SYSTEM.
5. WHEN CONSTRUCTING MANHOLE OVER AN EXISTING MAIN, SUPPORT PIPE(S) AND MANHOLE SECTION WITH CONCRETE BLOCK AND POUR BASE AS SHOWN. REMOVE TOP 1/2 OF MAIN PIPE AND FORM SIDE CHANNEL(S) AS REQUIRED.

ALDERWOOD
WATER & WASTEWATER
DISTRICT

SHALLOW MANHOLE
UNDER 5' INVERT TO COVER

DATE: 11-2015	DWG. S-6

APPROVED BY: DLH
DISTRICT ENGINEER

NTS